30W IP horn speaker

NV-IPS8030/M-II



KEY FEATURES

30W | SPL 120 dB | CLASS D | VoIP | IP67

KEY FEATURES

- built-in 30W Class D amplifier
- maximum sound pressure level: 120 dB
- build-in omnidirectional microphone
- compatibility with VoIP, SIP protocols

COMPLIANCE

ONVIF S

DIMENSIONS

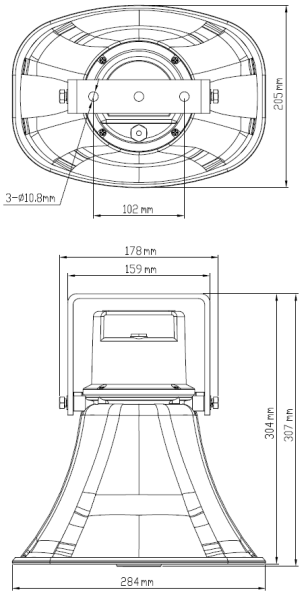

SPEAKER

Speaker type	horn
Maximum sound pressure	120 dB
Frequency response	350 Hz - 8 kHz
Frequency range (±10 dB)	500 Hz - 2 kHz

AUDIO

Amplifier	30W power, class D
Signal to noise ratio	91 dB
Harmonic distortion	0.1% @1kHz
Audio files	system files (built-in): 5 user files: 10

NETWORK

Audio Compression	OPUS, MP3, G.711, G.722
Network Protocols Support	HTTP, TCP/IP, HTTPS, IPv4, UDP, FTP, TFTP, DHCP, DNS, NTP, RTSP, RTP, RTCP, HTML5, ARP
VoIP	number of SIP accounts: 2 SIP protocols support: RFC3261, RFC5630, RFC5389, RFC3550, RFC4566
ONVIF protocol support	Profile S
Speaker configuration	from Edge, Firefox, Chrome, Opera browser languages: Polish, English, and others

OTHER FUNCTIONS

Security	firewall, Digest authorization for HTTP/RTSP, MAC/IP address filtering
System reaction to alarm events	establishing a SIP connection, playback a ringtone, playback of the audio message, push notification
Restoring default settings	via web browser, using reset button

INTERFACES

Audio input/output	1 x RCA/- • built-in microphone
Alarm Input/Output	1 (NO/NC) / 0
Network Interface	1 x Ethernet - RJ-45 interface, 10/100 Mbit/s

INSTALLATION PARAMETERS

Dimensions (mm)	284 W x 205 H x 307 L
Weight	1.9 kg
Degree of protection	IP 67 (details in the user's manual)
Enclosure	plastic - metal, white, wall mount bracket included • enclosure type: 8SPK
Power Supply	12 ~ 24 VDC, PoE+ (IEEE 802.3at, Class 4)

30W IP horn speaker
NV-IPS8030/M-II

Surge protection	TVS 1000 V
Power Consumption	34 W
Operating Temperature	-30°C ~ 60°C
Humidity	5% - 85%, relative (non-condensing)